Accent

Intamix Geo Viva

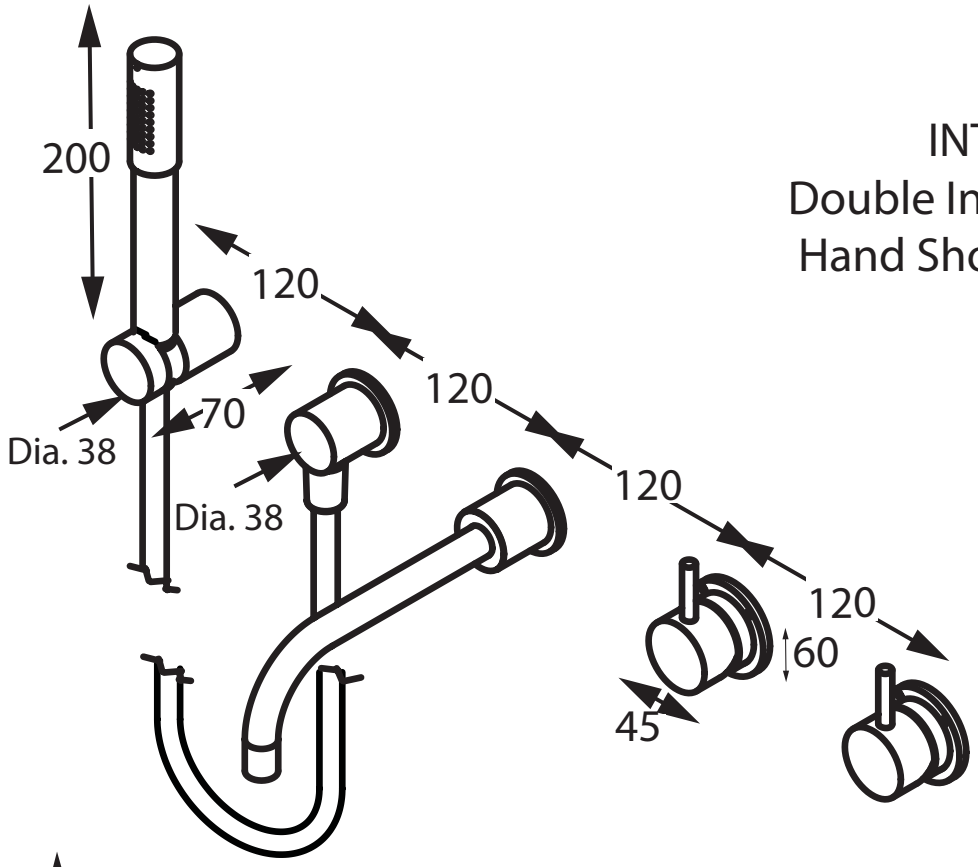

INT-CMX18
Double In Wall Mixer with
Hand Shower and Spout

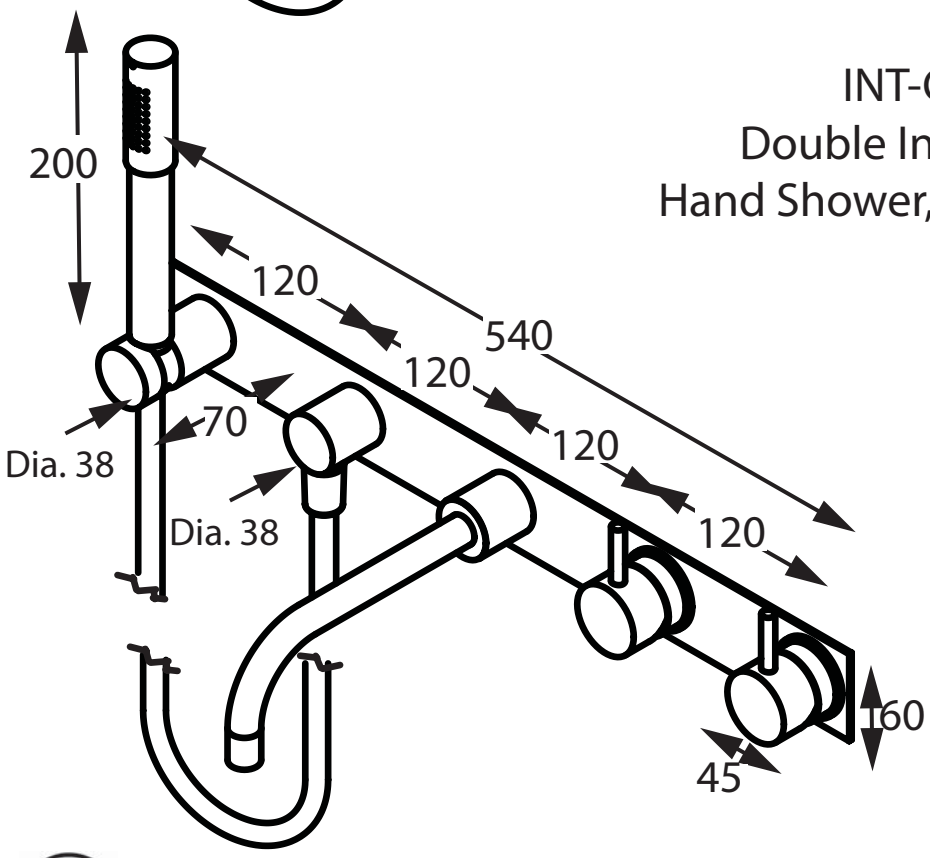

INT-CMX18BP
Double In Wall Mixer with
Hand Shower, Spout and Back Plate

Accent International
NSW: 3/3 Warrah Street Chatswood 2067 P: 02 9882 2633 F: 02 9882 2644
VIC: 3 Balmain Street Richmond 3121 P: 03 9428 8999 F: 03 9428 2499
Email: info@accenttapware.com.au Web: www.accenttapware.com.au